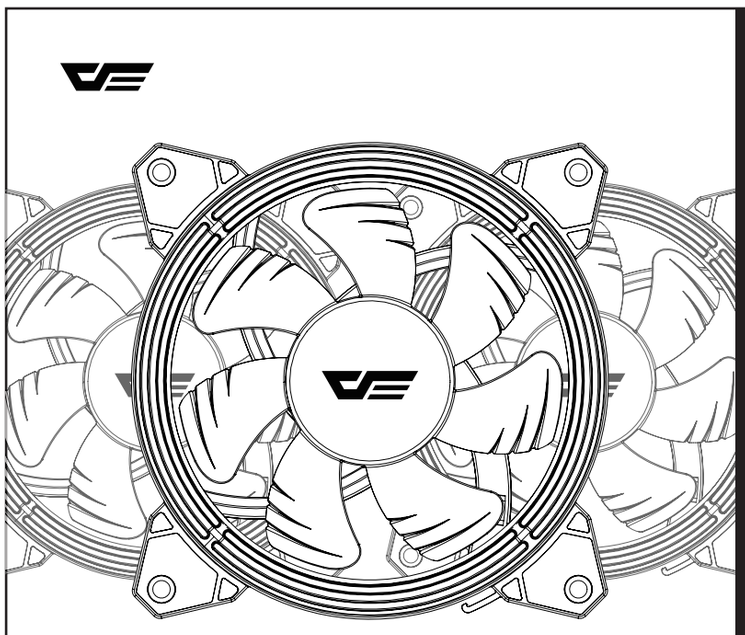

# CF11 PRO SERIES

TRIPLE HALO CHASSIS FAN

(3in1/5in1)

INSTALLATION GUIDE

www.darkflash.com

*Fly to unlimited!*

darkFlash

DARKFLASH INFOTECH CO., LTD.
www.darkflash.com



## Accessories

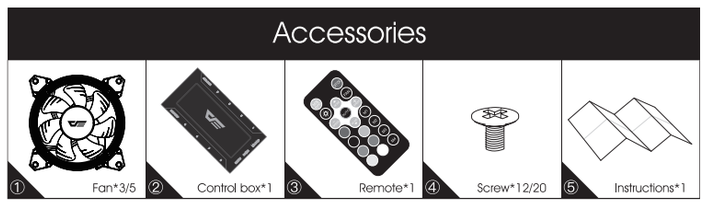


## Control box Wiring

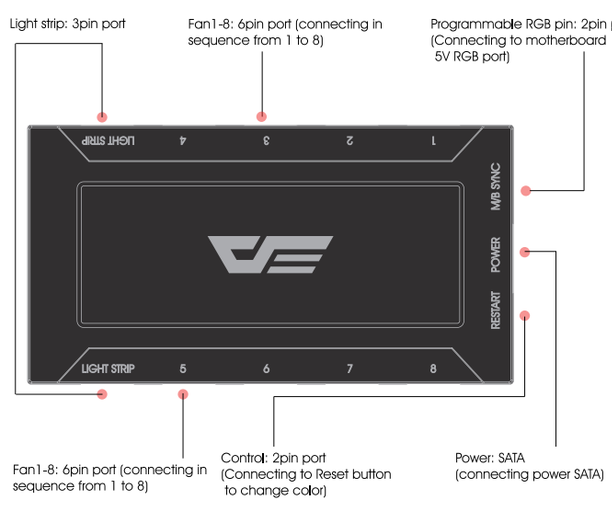


CF11 PRO SERIES
TRIPLE HALO CHASSIS FAN
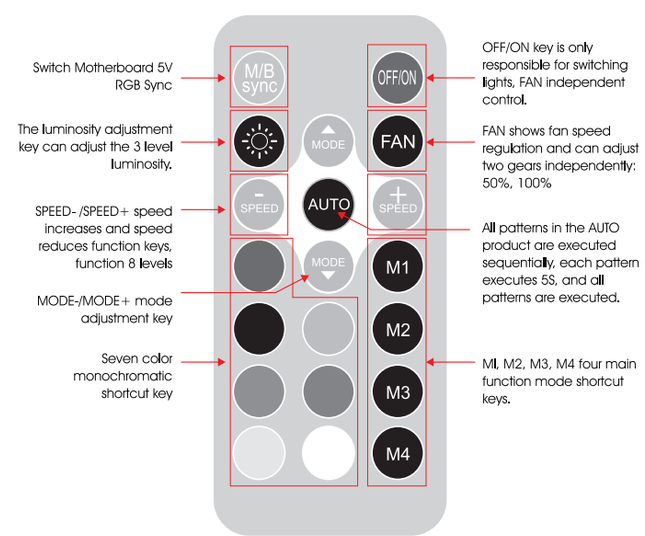
## Remote control usage